SERPAC H-65
Electronics Enclosures

NOTES:
1. WHEN MACHINE OR I PLATES MODIFICATIONS ARE REQUIRED, USE THE CENTER OF THE BOX TO DIMENSION.

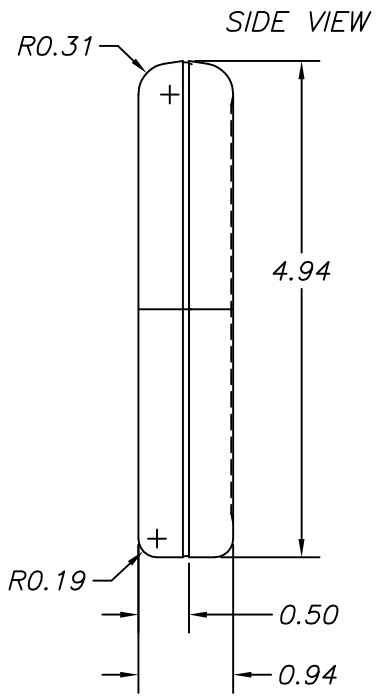

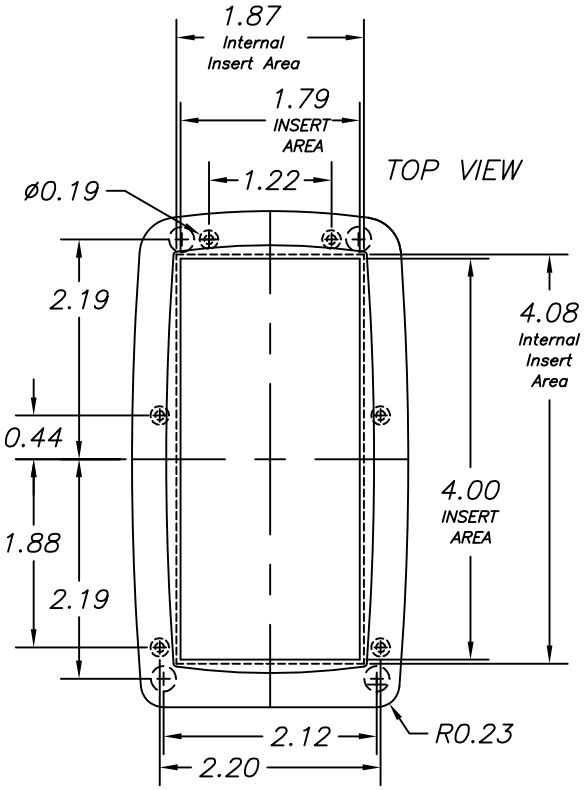

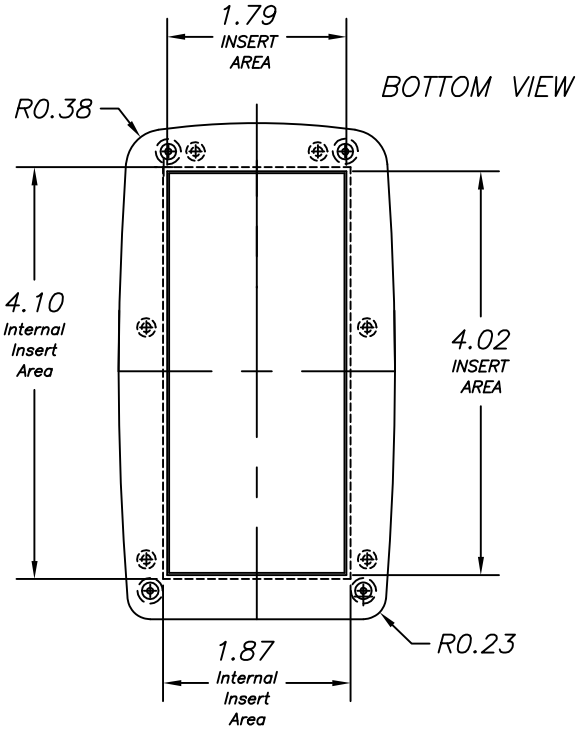

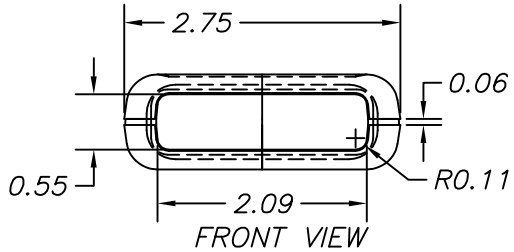

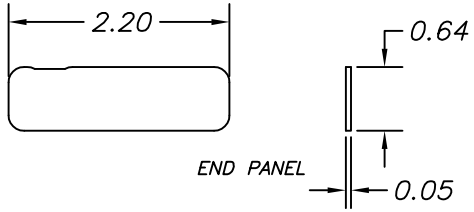

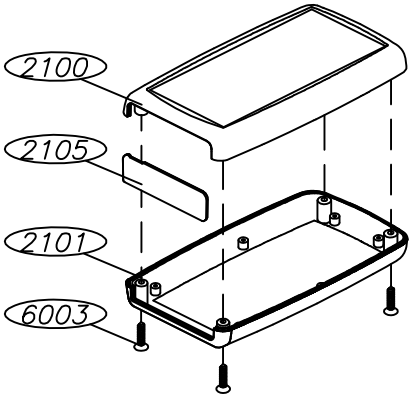

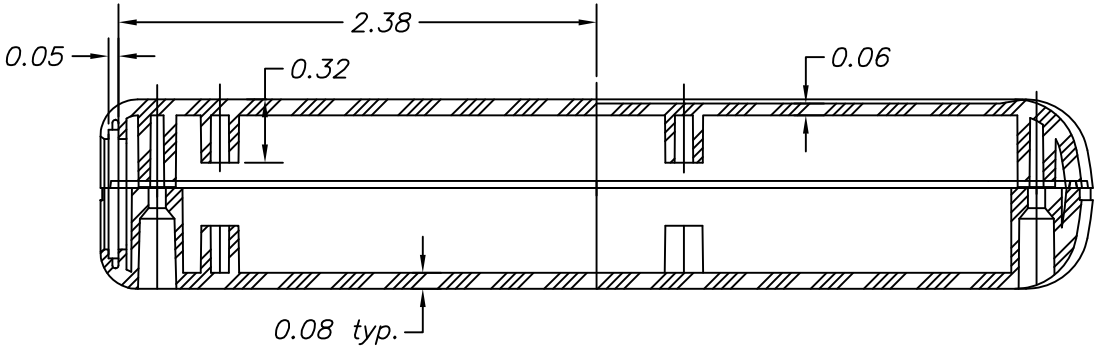

8/05/08

ALL DIMENSIONS ±.010

PART NO.	DESCRIPTION	PART NO.	ACCESSORIES
2100	PLASTIC TOP	2105CL	CLEAR PANEL
2105	PLASTIC END PANEL	2105IR	INFRARED PANEL
2101	PLASTIC BOTTOM (std)	2105R	TRANSPARENT RED PANEL
6003	SCREW (4)		

619 Commercial Ave. Covina, CA 91723
(626) 331-0517 Fax (626) 331-8584 http://www.serpac.com.